APPLIANCE DOORS BI FOLD

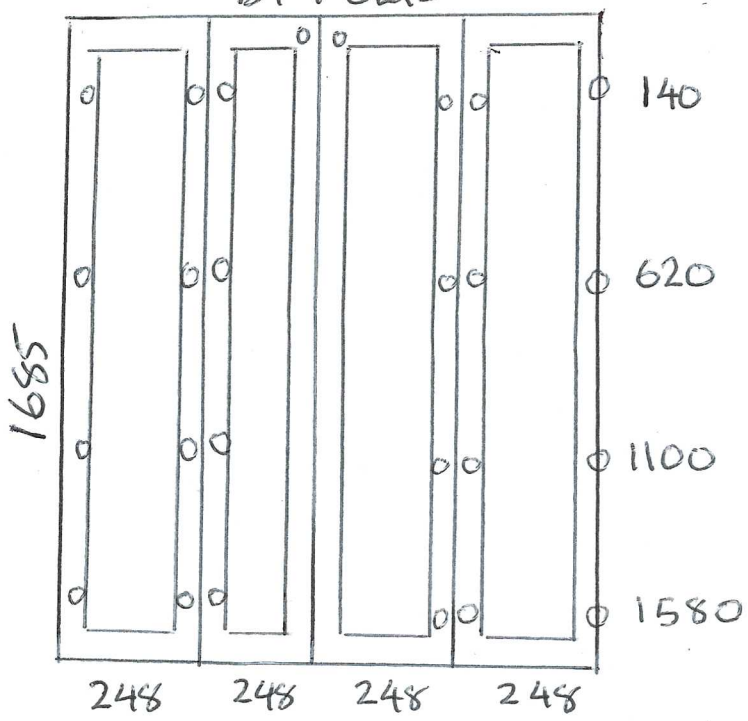

PANTRY DOORS

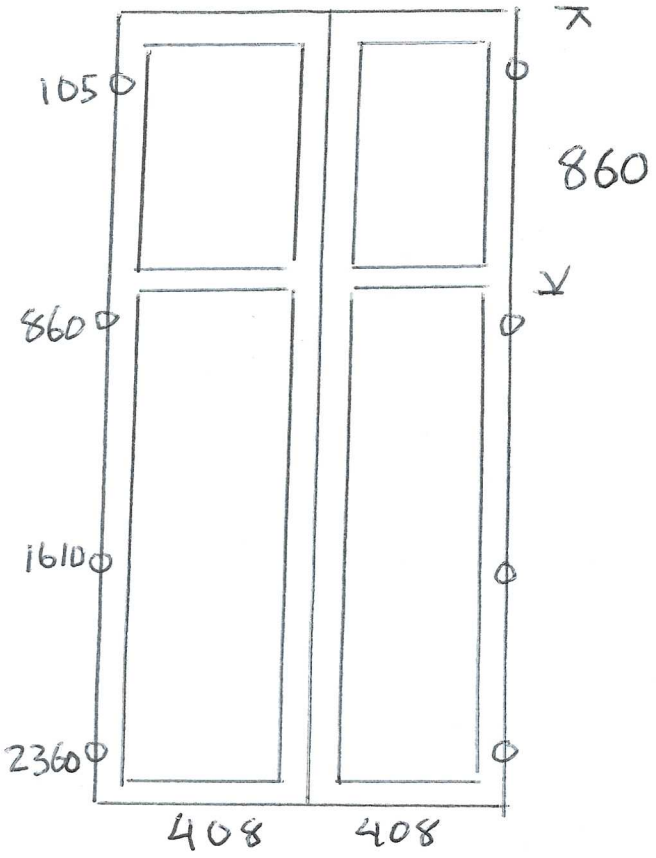
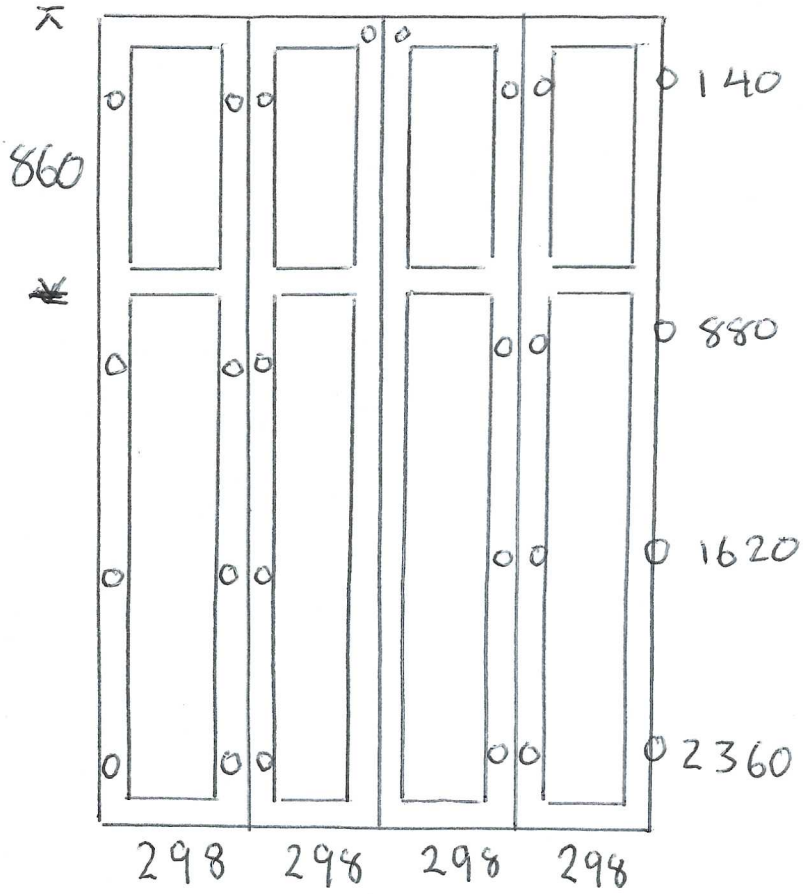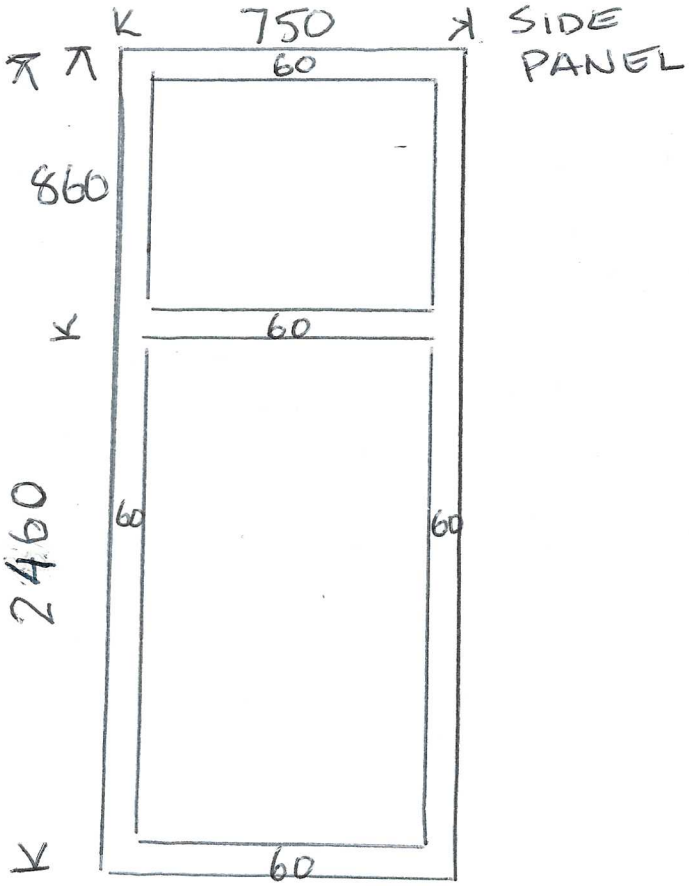
BAR BI FOLD DOORS