Special 9
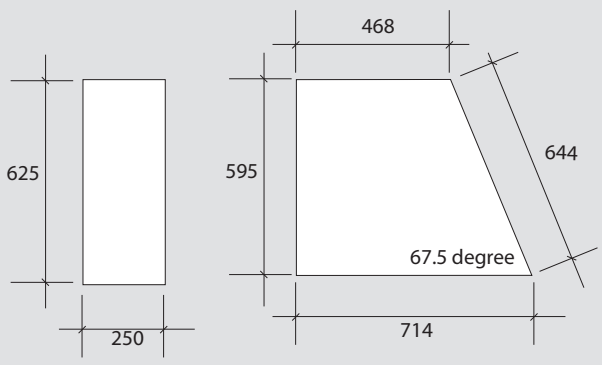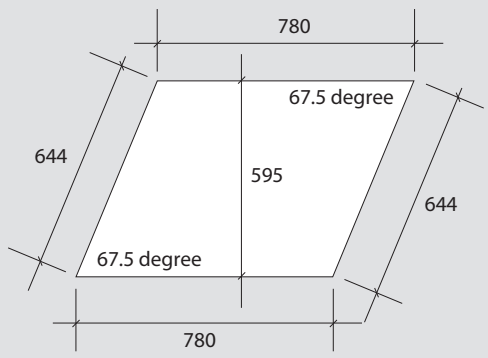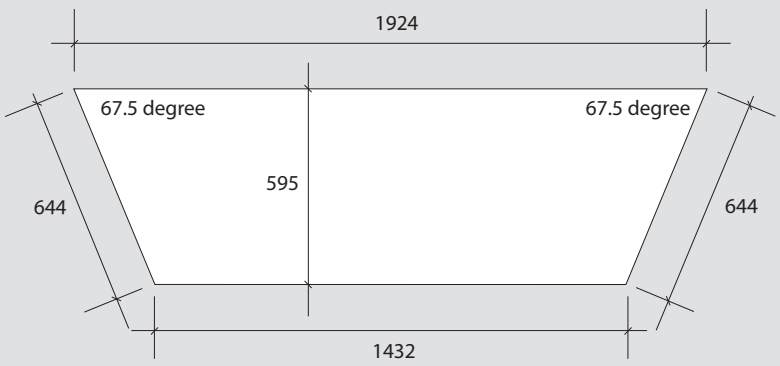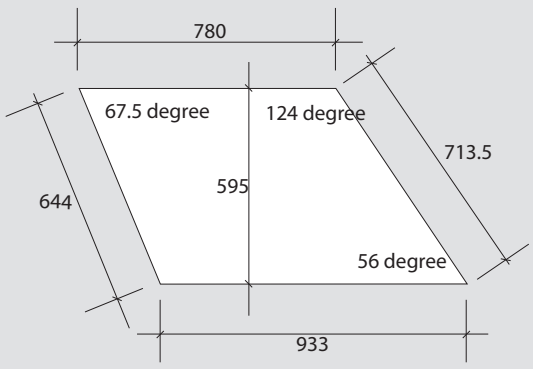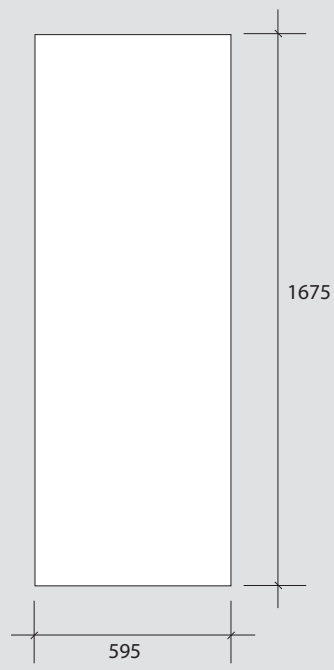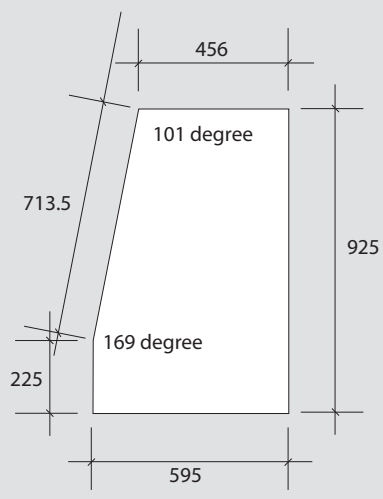
Substrate