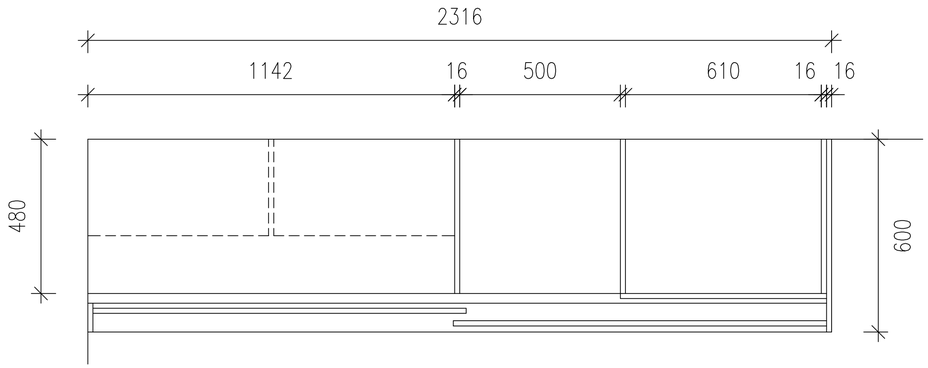

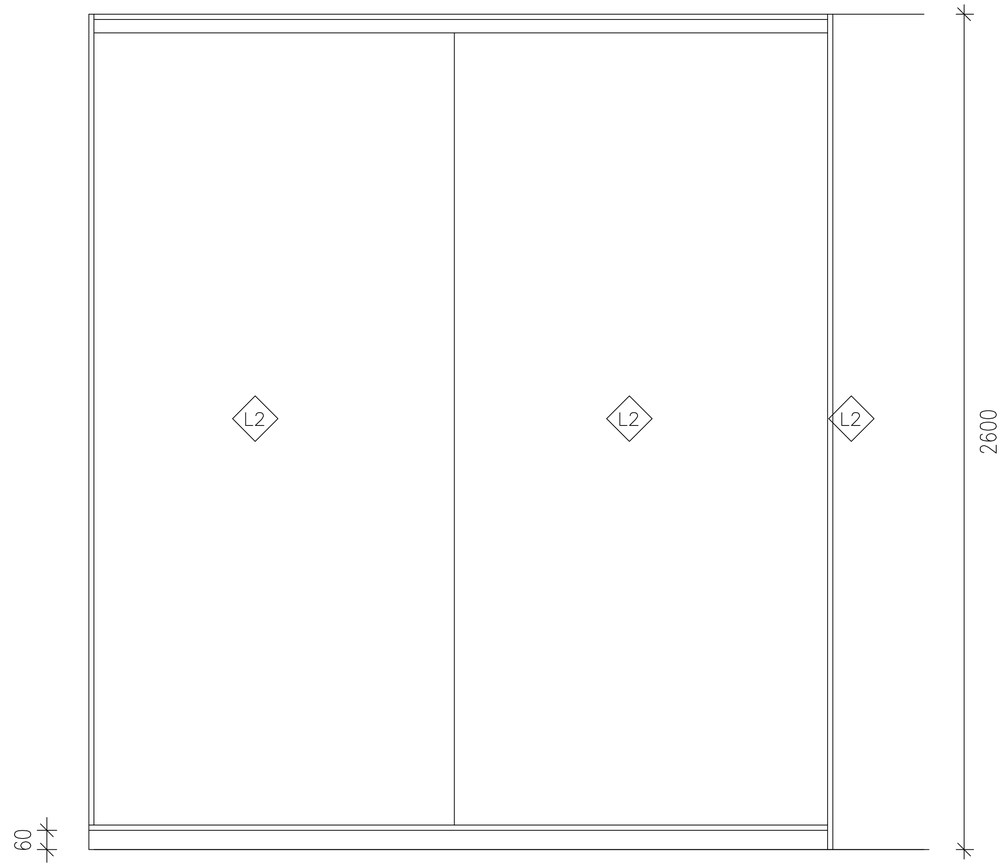

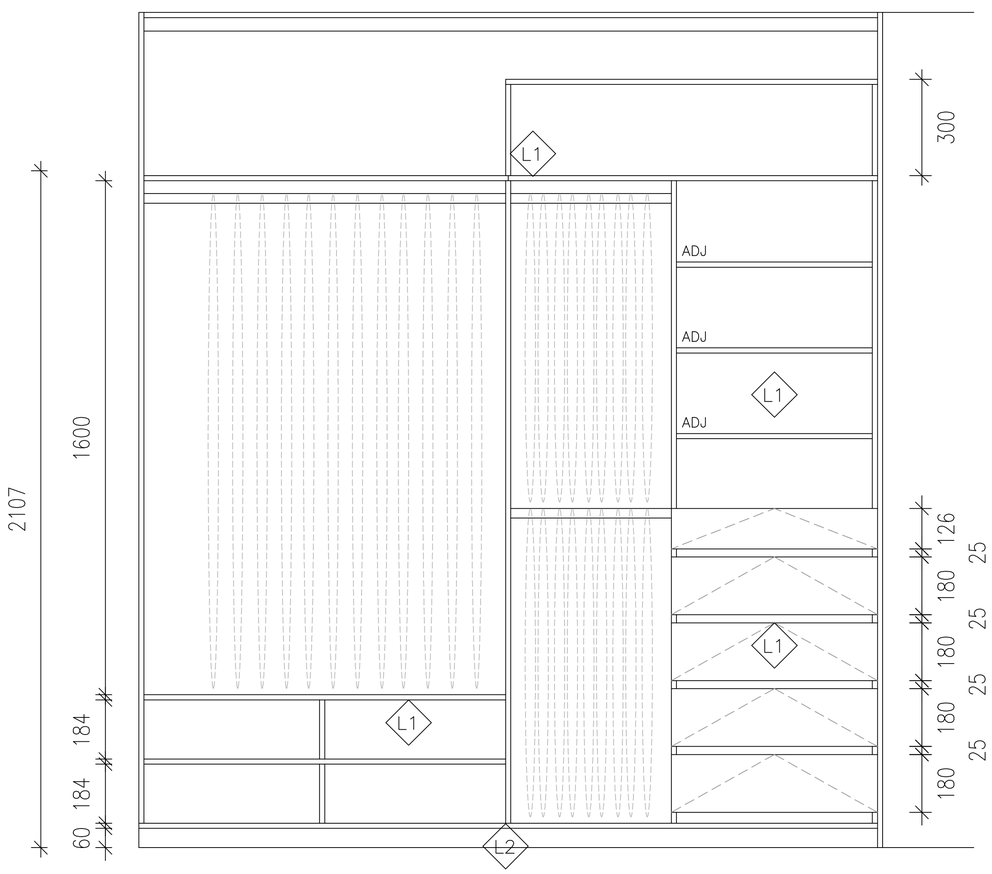

FINISHES

L1 — 16mm POLYTEC TASMANIAN OAK WOODMATT WITH 1mm MATCHING ABS EDGING

L2 — 16mm POLYTEC POLAR WHITE MATT WITH 1mm MATCHING ABS EDGING

H1 — HANDLES TBC

KYLIE ROWE

aseada
4 Kirrum Close Wantirna South 3152

PROJECT: 3/3-5 MORLEY CRESCENT HIGHETT

Drawing Title : Bedroom Robe

Date: 06/08/2024

Drawing No. A1

Revision : Rev 0

Drawn : AC

PLANS INSPECTED AND APPROVED FOR CONSTRUCTION

NAME

SIGNED

DATED / /