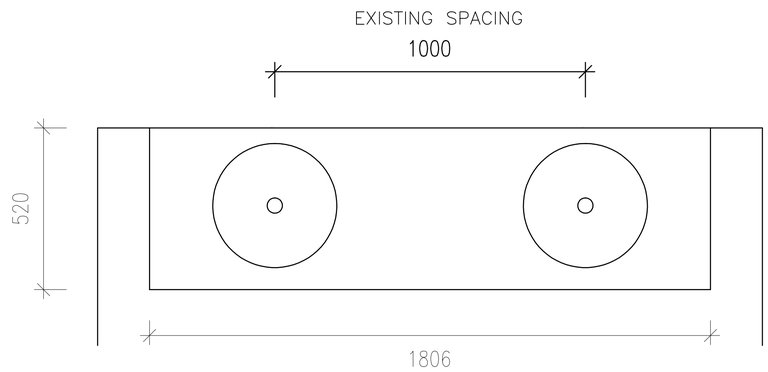

PLAN VIEW

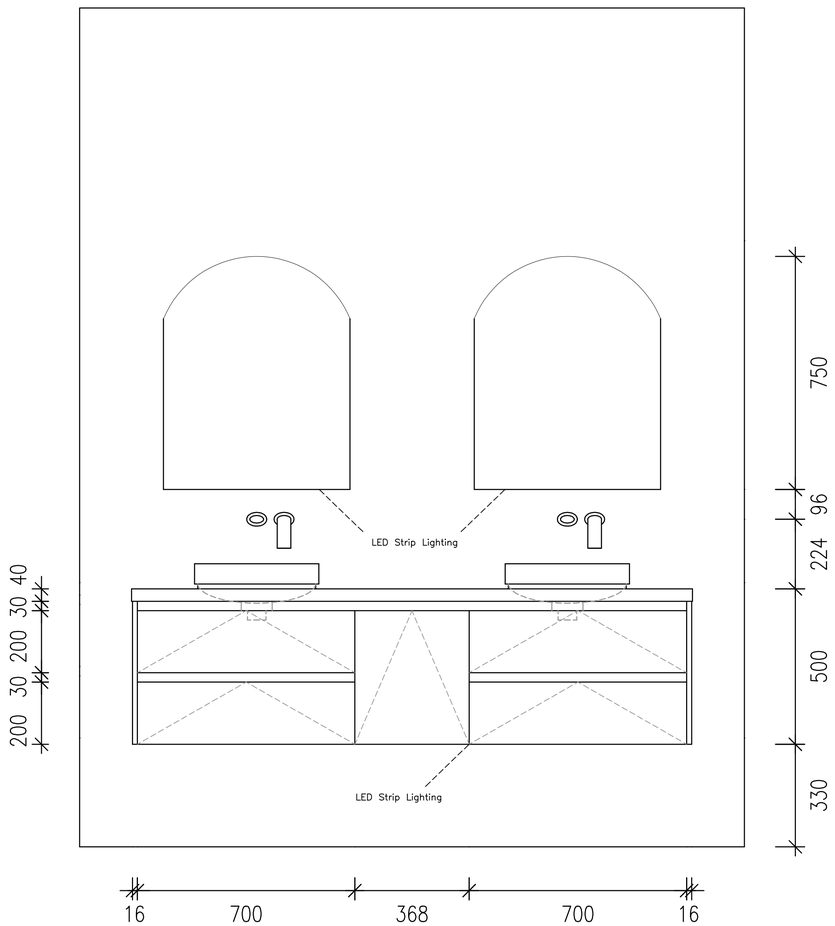

ELEVATION

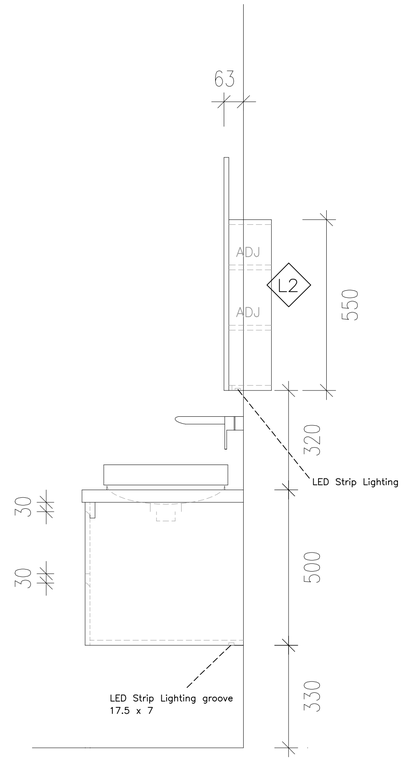

SIDE ELEVATION

FINISHES

S1 — 40mm STONE BENCHTOPS BY JM COLOUR TBC

L1 — 16mm LAMINEX CHARCOAL COLOUR BOARD WITH 1mm ABS EDGING

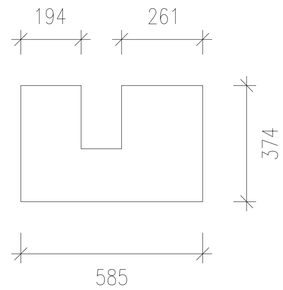

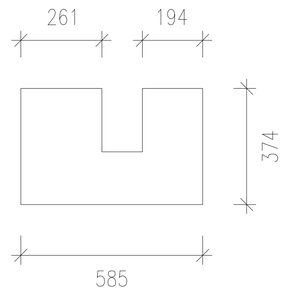

TOP DRAWER BOTTOMS

JO'S MAKEOVERS

aseada
4 Kirrum Close Wantirna South 3152

PROJECT: 8 WINTERSET CLOSE MORDIALLOC

Drawing Title : ENSUITE VANITY

Date: 20/11/2024

Drawing No. A1

Revision : Rev C

Drawn : AC

PLANS INSPECTED AND APPROVED FOR CONSTRUCTION

NAME _____

SIGNED _____

DATED / /