ORDER FORM

SJ Custom Kitchens	
Order Ref #	BEN
Date Ordered:	17/2/25
Date Required:	21/2/25
Carcass:	white H/MR 16mm
Colour Board:	N/A
Edge Type:	N/A

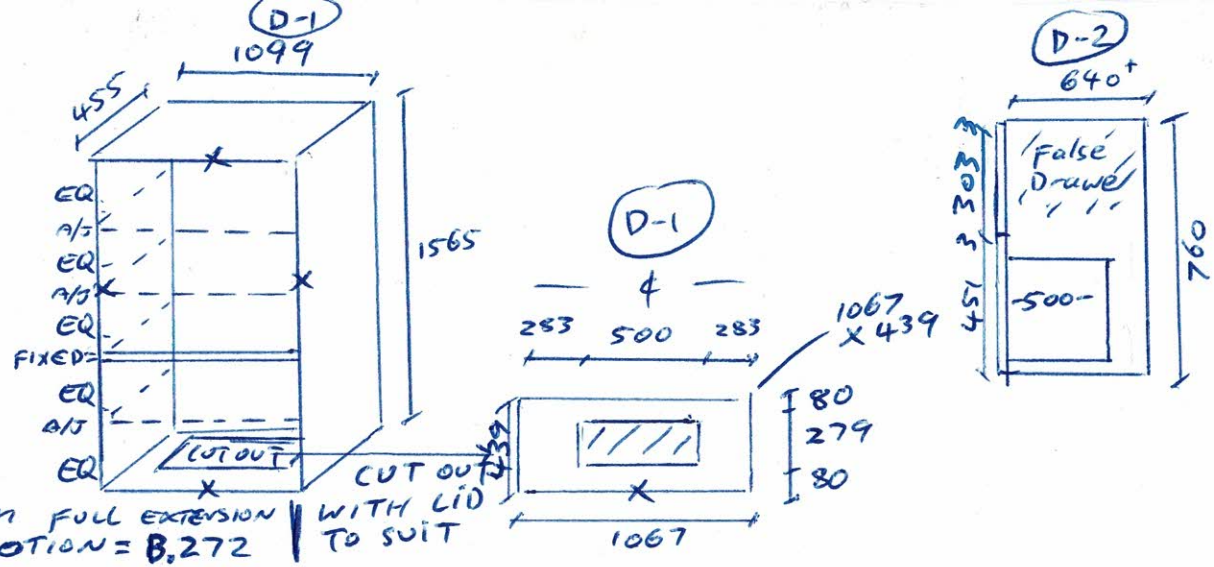

Drawer Runners = CONCEALED TANDEM FULL EXTENSION with integrated BLUMOTION = B.272

QTY	CABINET	HEIGHT PLUS KICKER	WIDTH	DEPTH + DOOR	NOTES
1	X1 FALSE DRAW Base Cab	465	1099	455	NO Draw - NO Drilling D/F = 465 x 1095
1 D-1	X2 DOOR WALL CAB	1565	1099	455	X1 Fixed shelf X3 Adjust Doors = 1563 x 546.5
1	X3 Drawer base Cab	760	562	640	3/150/3/150/3/451 X 559 - 550 Draw Depth -
1 D-2	X2 Drawer base Cab	760	562	640	3/303/3/451 X 559 - 500 - Draw - Depth
1	X1 Door R-HINGE base Cab	760	562	640	X1 Adjust shelf - Full height HOLES - Door 757 x 558