EXECUTIVE ROBES & SCREENS

CLIENT:	P + J CONST
TAX INVOICE ADDRESS:	
EMAIL:	JOE@PANDJCONSTRUCTIONS.COM.AU
JOB ADDRESS:	LOT 1235 ACAI CRT CLYDENTH
REP CODE & NAME: PMCOLLIER	JOB NUMBER:
PO NUMBER:	NAME: JOE GENTILE / MOBILE: 0418380781

COMMENTS & INSTRUCTIONS:

MEASURE DATE: 28-5-25

INSTALL DATE:

☐ STANDARD DRAWERS
☑ SOFT CLOSE DRAWERS
☑ 25MM FINGERPULL
HANDLE CODE
1X HINGED DOOR

FRAME/TRACK COLOUR
INSERT TYPE
☐ FRAMED
☐ FRAMELESS

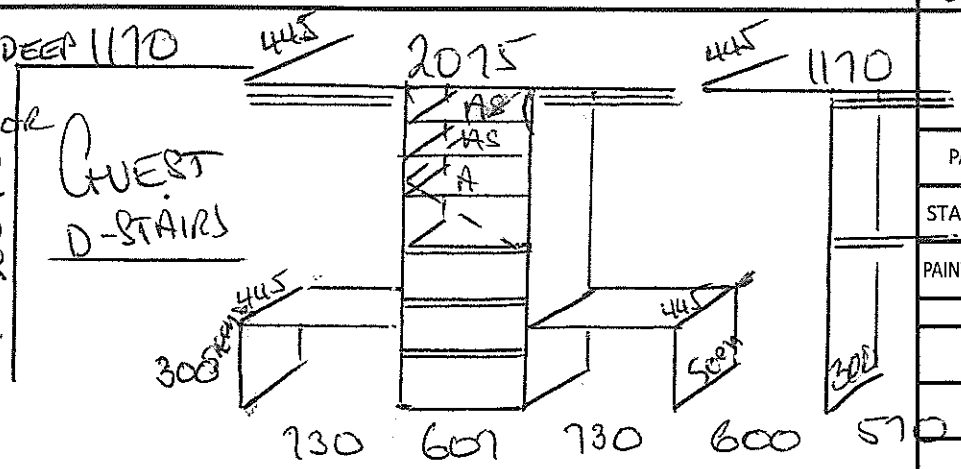

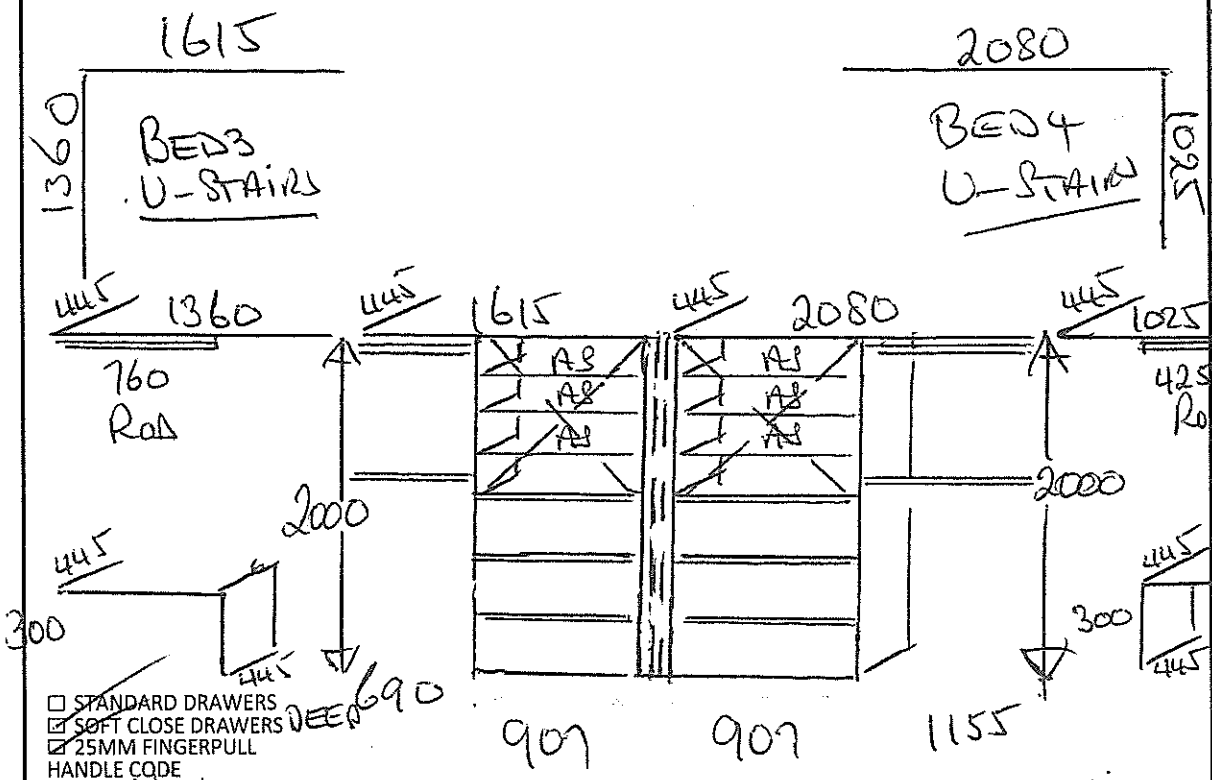

☐ STANDARD DRAWERS
☑ SOFT CLOSE DRAWERS
☑ 25MM FINGERPULL
HANDLE CODE
2x HINGED

FRAME/TRACK COLOUR
INSERT TYPE
☐ FRAMED
☐ FRAMELESS

2x HINGED
NOTAID WALNUT
DOORS

PAGE ____ OF ____

STAIRS	(Y)	N	N/A
PAINTED	Y	N	

FLOOR LEVEL	
1	2
3	4+

GROSS PRICE CALCULATOR	
SIDEWALLS ☐ Melamine ☐ Custom	
Top/Floor	
TOWER UNIT ☐ 507 ☐ 607	
RODS (EACH)	
CUTS ☐ Skirting ☐ Cornice	
FRAMING ☐ Post ☐ Custom ☐ Melamine	
BACKING Melamine	
SHELVING	
ADJUSTABLES	
DIVIDERS	
DRAWER HANDLE	
TERMS ARE STRICTLY ACCOUNT / COD	
NON ACCOUNT TERMS ARE STRICTLY C.O.D AND ARE TO BE PAID ON PROGRESSIVE INSTALL. A 1.5% ADMIN FEE WILL BE CHARGED IF PAYING BY CREDIT CARD	
TOTAL INC. GST	

GROSS	%	NETT	C/M	TRAVEL	CARTAGE	REMOVAL	OTHER	TOTAL EXC GST	GST