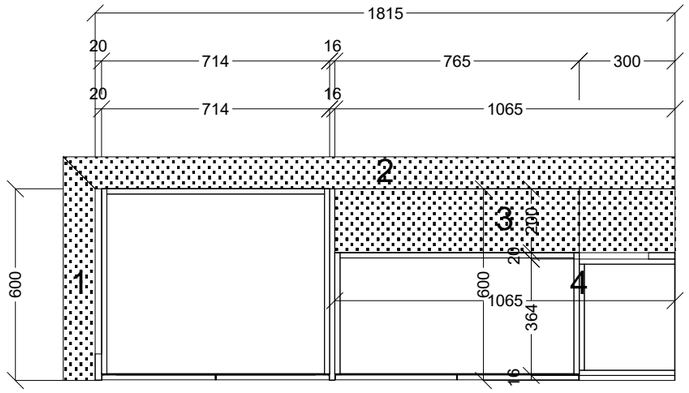

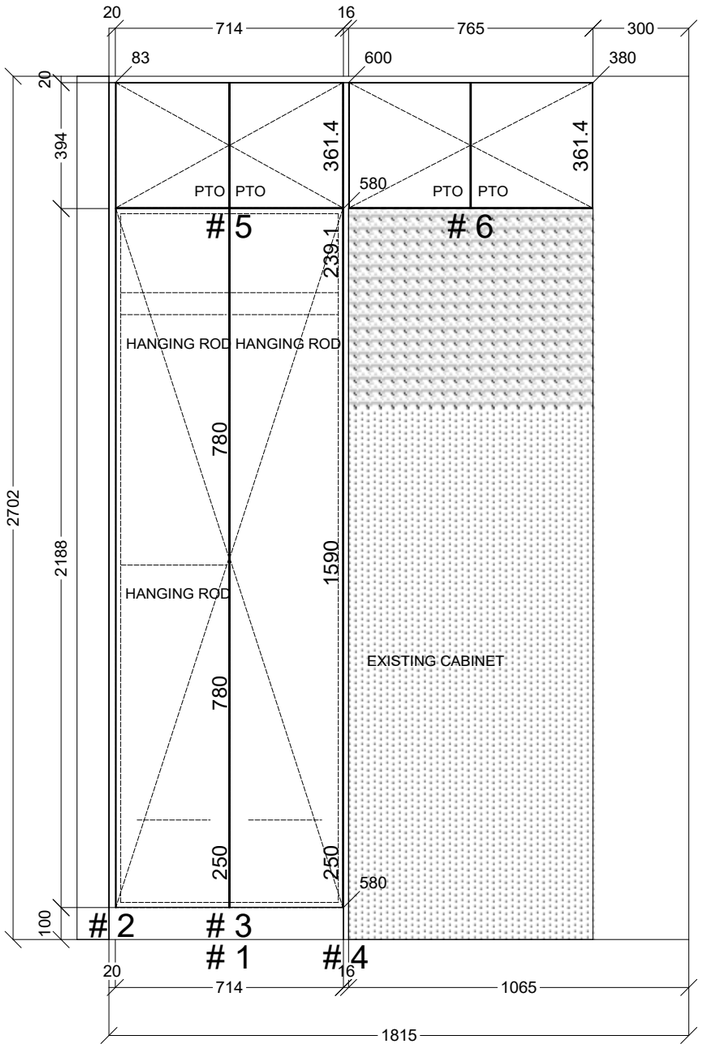

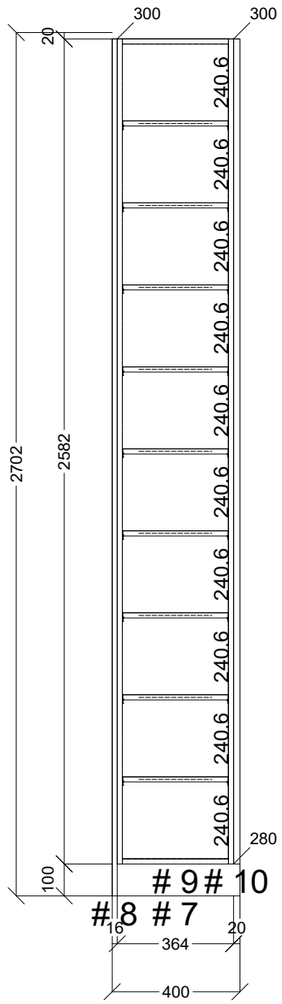

CONNECT KITCHENS	Client:	Door and panels style/colour: BOTTEGA OAK WOODMATT		Sheet 1 of 1
	Room: ROBE	Benchtop Colour: N/A	Drawer slides: N/A	Carcass: WHITE HMR
	Date: 25/11/25	Address: BRYANT ST BRUNSWICK	Handles Item No: TBA	Approved by: